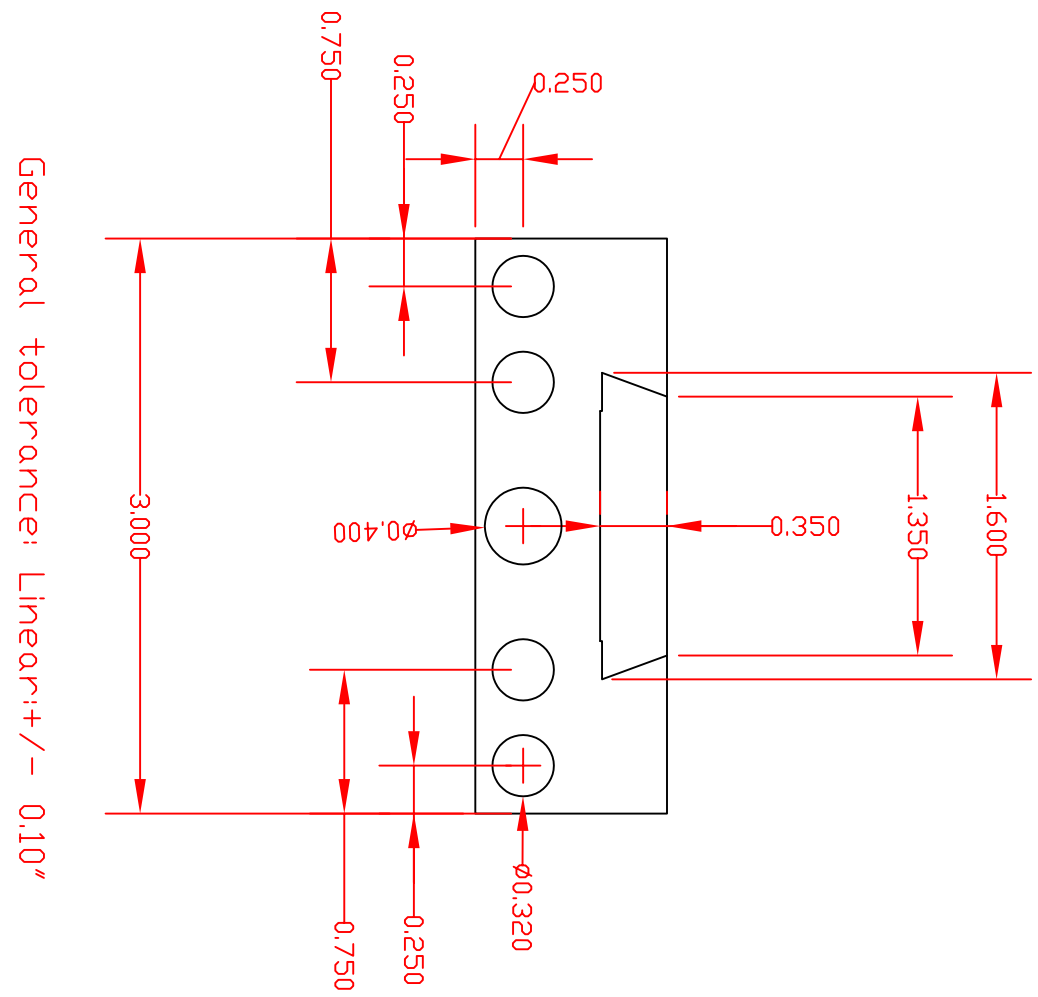

General tolerance: Linear:+/- 0.10"

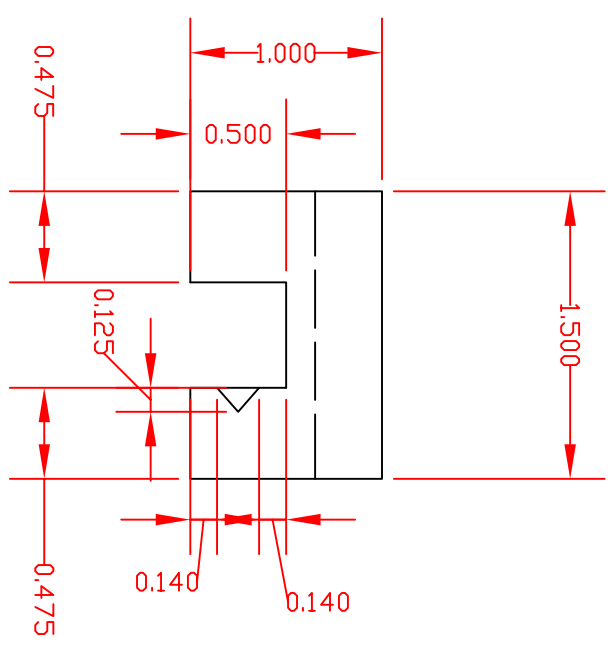

ZONE	REV	DESCRIPTION	DATE	APPROVED

REVISIONS

SIZE	FSCM NO.	DWG NO.	REV
SCALE		SHEET	