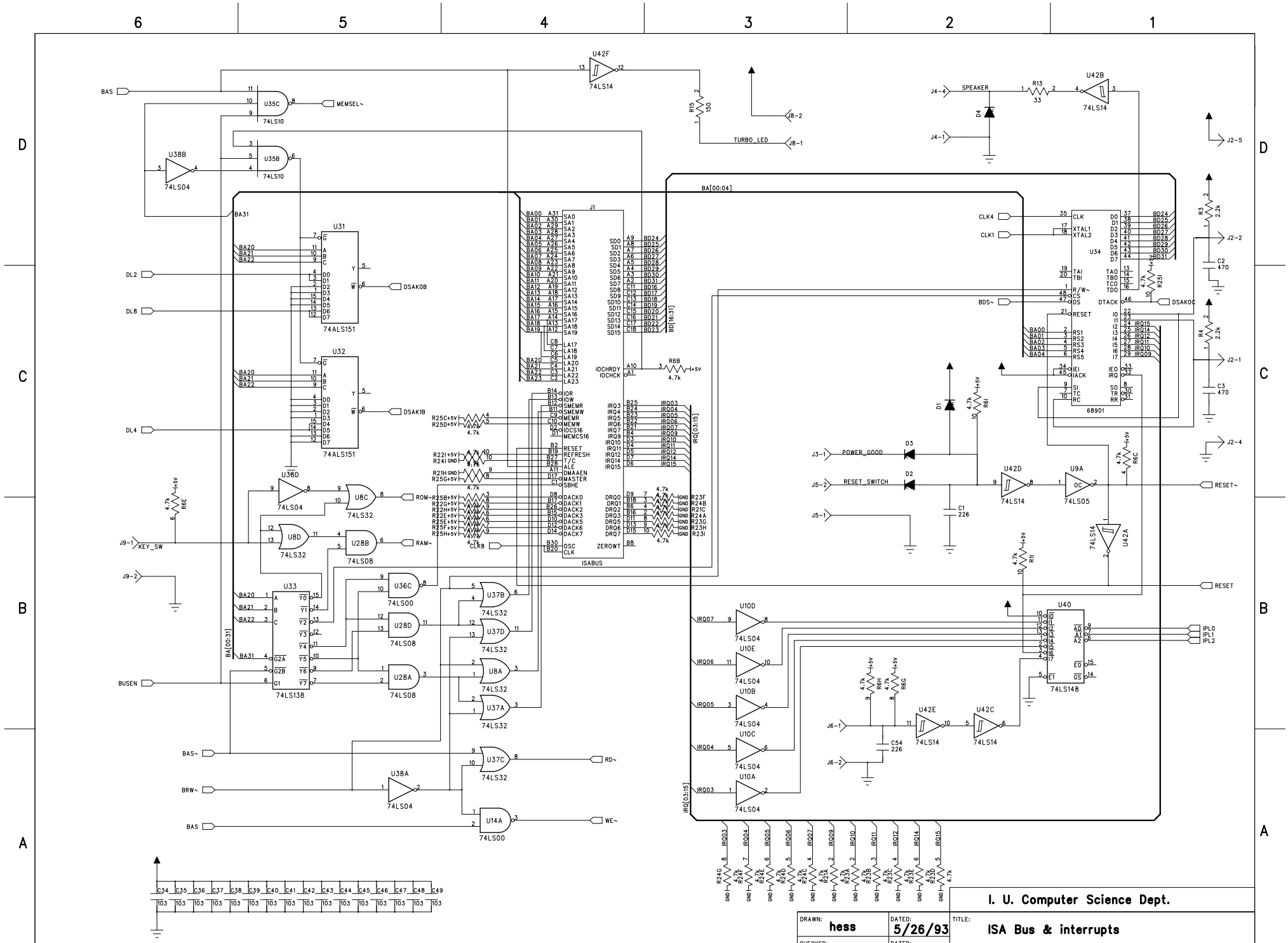

I. U. Computer Science Dept.

DRAWN: hess	DATED: 5/26/93	TITLE: ISA Bus & interrupts	
CHECKED:	DATED:	PROJECT: 68030 WorkStation	SHEET: 2 OF 3 REV: