ALL-SOLID-STATE PREAMP

PART 2 – VOLUME CONTROL STAG

by T. Giffard

In this second and final part of the article we describe the ... and balance control stages, followed by the construction of the complete preamplifier.

Like the CMOS switches described in Part 1, the volume control switches are connected in an amplifier circuit in such a way that they have no potential drop across them. This results in very low distortion, so that the preamplifier can be used in top-quality stereo installations.

The basic principle of the volume control circuit is illustrated in Fig. 9. Since it is not easy to design an electronic switch with, say, fifty positions, two cascaded attenuation networks, each consisting of eight voltage dividers, are used.
Each network is switched in steps of 1.25 dB and the second (coarse) in steps of 10 dB. When the 'fine' attenuator reaches maximum attenuation ($8 \times 1.25 = 10$ dB), the 'coarse' one is switched by one step (= 10 dB). A total attenuation of 78.75 dB in $8 \times 8 = 64$ steps is therefore provided. This number of steps could not be provided by a standard rotary switch.

Each attenuator section is resistively coupled to the input of an 8-to-1 multiplexer. The output of each multiplexer is applied to the inverting input of an opamp, so that there is no voltage drop across the multiplexers.

A control circuit ensures that the multiplexers are switched correctly and that the attenuators for the left- and right-hand channels can be used independently with the aid of balance switches.

A preset key makes it possible for the volume to be set to a predetermined position.

Circuit description

In the circuit diagram of Fig. 10, the buffered signals from the input circuits are fed to the 'fine' attenuator (R94 –R101 for

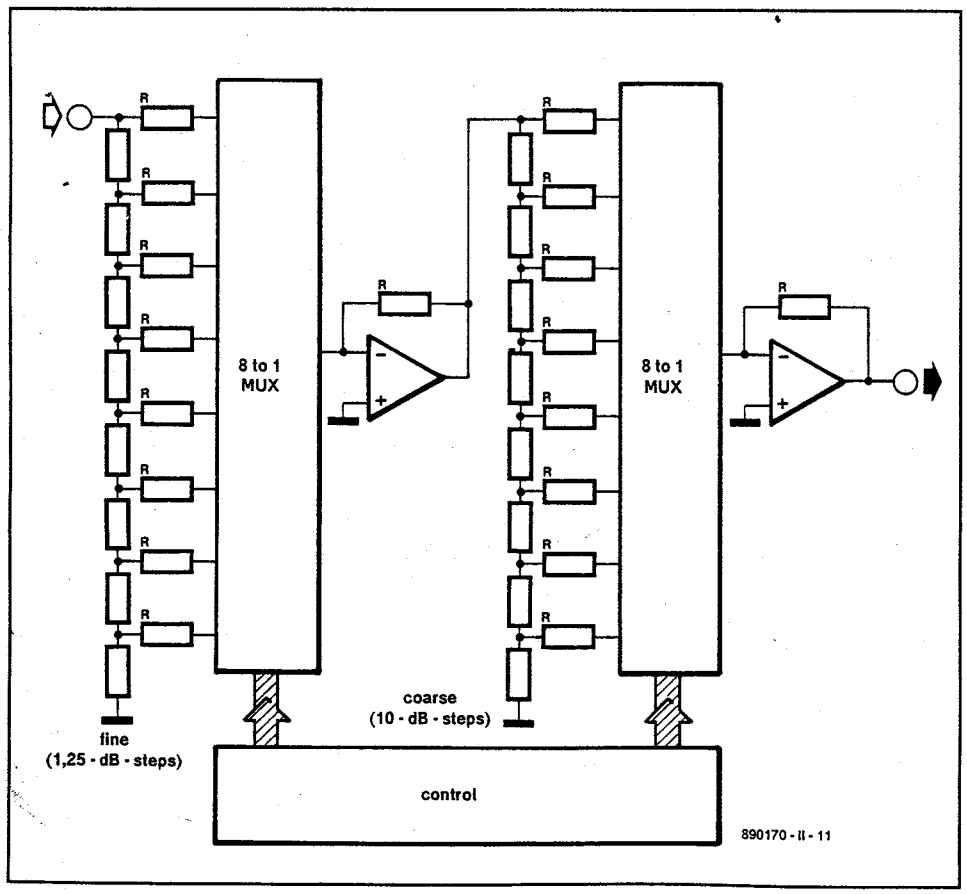

Fig. 9. Fundamental set-up of the volume control circuit.

Calculation of voltage dividers

Each of the voltage dividers in the attenuators of Fig. 9 is basically configured as shown below:

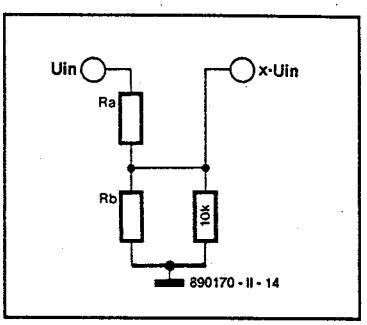

Each voltage divider is formed by resistors Ra and Rb, the ratio of whose values depends on which branch of the divider they are located in. The 10 kΩ resistor is connected via the multiplexer to the inverting input of the opamp (virtual earth), so that, as far as the potential divider is concerned, it is connected to earth.
The voltage at the junction of the resistors is xUin, where x is the attenuation factor (no attenuation: $x = 1$; maximum attenuation: $x = 0$).
In the computation, the value of Ra + Rb is taken as 10 kΩ, which gives a value for x of:

$$x = \frac{R\,b \,//\, 10\,k\Omega}{R\,b \,//\, 10\,k\Omega + R\,a}$$

and for Ra of (10 kΩ – Rb).
Substituting these values and rearranging the formula for x, gives a value (in kΩ) for Rb of:

$$R\,b = \frac{10 - \frac{10}{x} + \sqrt{(\frac{10}{x} - 10)^2 + 400}}{2}$$

If it is desired to change the value of the steps, x must be replaced by $10^{y/20}$, where y is the desired attenuation in dB per step. Remember that from the result for each step the result of the previous step must be deducted. Resistance values so calculated must, where necessary, be rounded to the nearest standard value.

$y = -1.25$ dB fine $x = 0.866$
$y = -10$ dB coarse $x = 0.316$

22V 2A

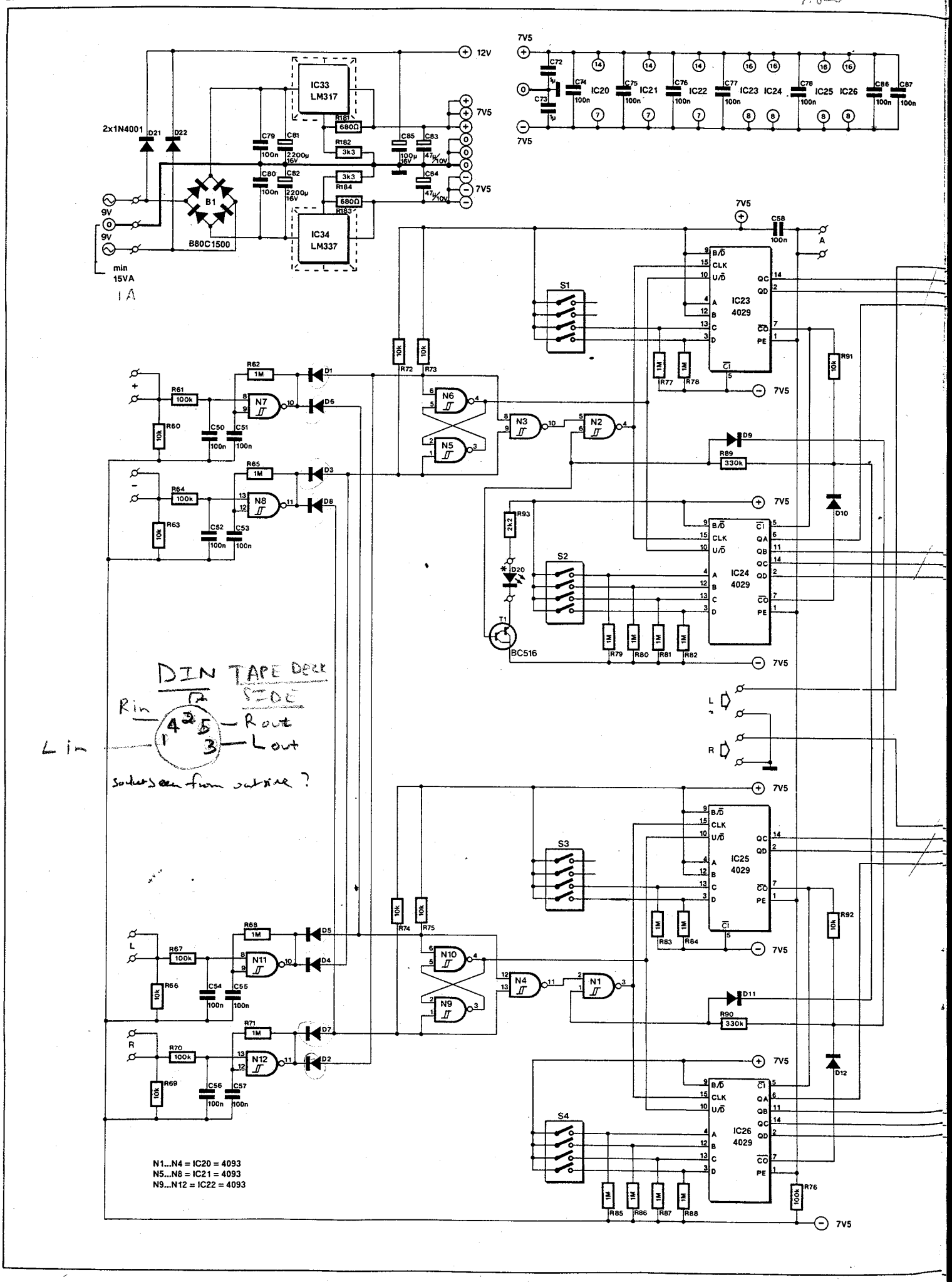

12V
7V5
IC33 LM317
IC34 LM337
2x1N4001
D21
D22
B1
B80C1500
9V
min 15VA
1A
IC20
IC21
IC22
IC23
IC24
IC25
IC26
IC23 4029
IC24 4029
IC25 4029
IC26 4029
S1
S2
S3
S4
BC516
T1
DIN TAPE DECK SIDE
Rin
Rout
Lin
Lout
socket seen from outside ?
N1...N4 = IC20 = 4093
N5...N8 = IC21 = 4093
N9...N12 = IC22 = 4093

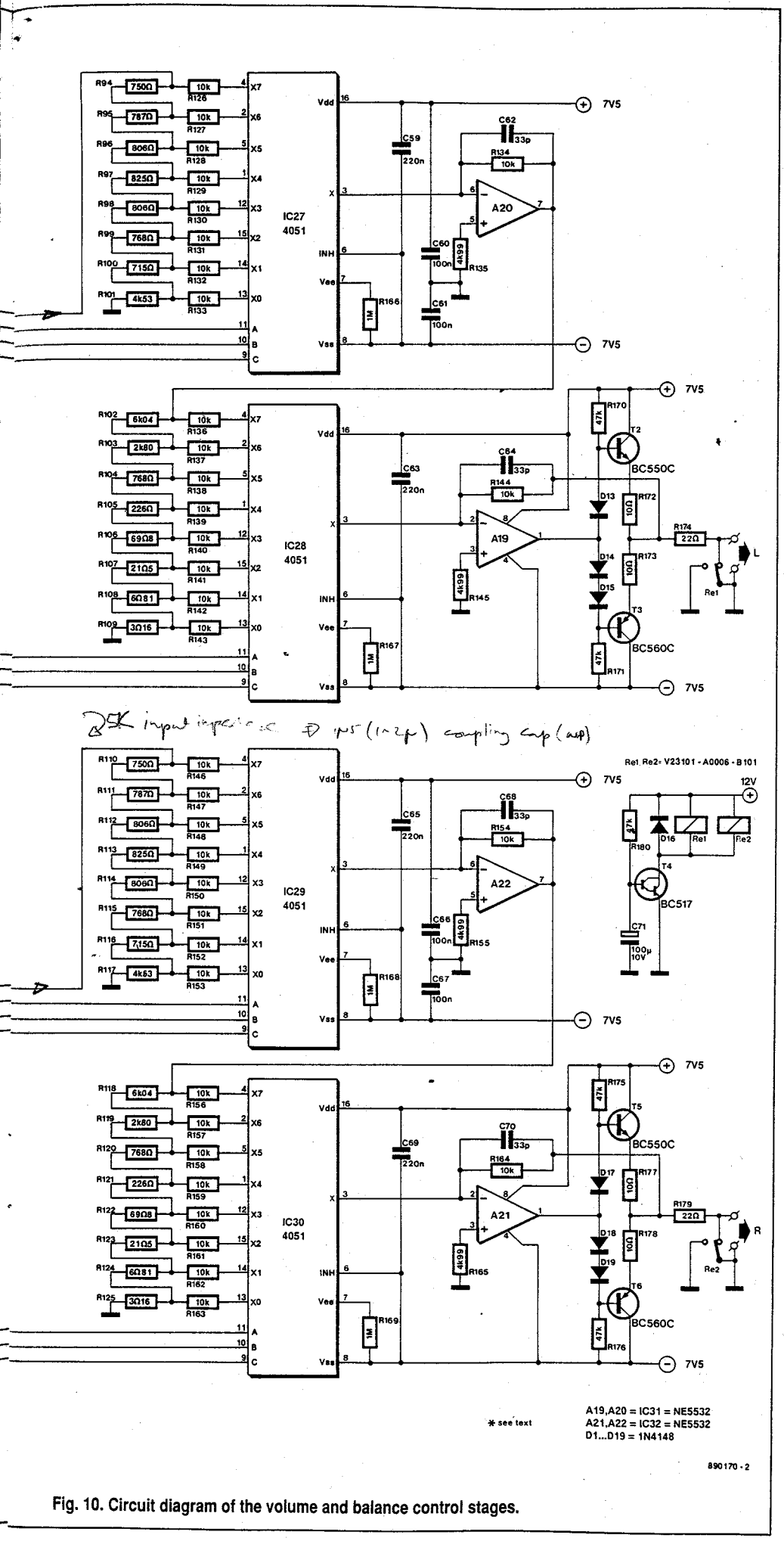

Fig. 10. Circuit diagram of the volume and balance control stages.

the left-hand channel and R110–R117 for the right-hand channel). Each branch of the attenuator is connected via a 10 kΩ resistor to the first multiplexer (IC27 and IC29 for the left-hand and right-hand channels respectively. The output of the 'fine' attenuators is applied to the 'coarse' attenuators, R102–R109 and R118–R125, via buffers A20 and A22 respectively. The output of the 'coarse' attenuators is applied to a second multiplexer, IC28 and IC30 respectively, each of which is followed by a buffer, A19 and A21.

Buffers A19 and A21 are configured rather differently from A20 and A22, in that they have an additional, complementary pair of transistors, T2-T3 and T5-T6.

The three diodes between the bases of these transistors ensure an adequate quiescent current.

The output impedance of these circuits is very low, so that long leads to the power amplifiers will not cause any problems.

The 22 Ω resistors, R174 and R179, provide short-circuit protection. The outputs may be connected direct to 600 Ω headphones.

The relay contacts at the outputs connect the outputs to earth to obviate audible clicks when the mains is switched on or off. It was not possible to replace the relay by an electronic device. Fortunately, the contacts are not in the signal path, so that the sound quality can never be affected by them.

The multiplexers are switched by Type 4029 preset up/down counters: IC23-IC24 for the left-hand channel and IC25-IC26 for the right-hand channel. DIP switches allow the volume to be preset to individual taste. Each time the preamplifier is switched on or when the reset key is pressed, the preset counter positions are assumed.

The carry-out pins of the counters are interconnected in a manner to ensure that the gates which provide the clock pulses, N2 for IC23-IC24 and N1 for IC25-IC26, are both blocked the moment one of the counters reaches nought or maximum. This arrangement ensures that the balance setting is maintained when the volume is adjusted to nought or maximum.

The plus and minus volume keys are connected to start/stop oscillators N7 and N8 respectively. A momentary depression of a key causes a single pulse at the output of the associated gate, while a sustained depression causes a pulse train. If the speed of this control is found to be too low, it may be increased by lowering the value of C51 and C53, and possibly also of C55 and C57.

The pulses associated with the +key are fed to N3 via D1 and to N4 via D6. The ensuing signals are taken to the clock inputs of the counters via

N2 and N1 respectively.

When the –key is pressed, the generated pulses are passed to the clock inputs of the counters via D3-N3-N2 and D8-N4-N1 respectively.

Two bistables, N5-N6 for the left-hand channel and N9-N10 for the right-hand channel, provide a signal that drives the up/down inputs of the counters. The level of this signal depends on which key is pressed.

The circuit of the balance control is virtually identical with that of the volume control. An exception is that the bistables are configured in a way that causes the left-hand counter to receive an 'up' signal when the right-hand counter gets a 'down' signal. Thus, if the left-hand balance key is pressed, the left-hand counter counts up and the right-hand counter counts down. Pressing the reset key returns the circuits to the position set by S1–S4. That position need not be the same for the two channels. This is useful where, for instance, there is a small difference in balance between the two speakers.

The power supply provides a separate voltage for energizing the output relay. Because of the (relatively) low value of C85, the relay is deenergized immediately the mains is switched off. On power-up, there is a delay provided by R180-C71-T4.

The remainder of the preamplifier is powered by the regulated, symmetrical voltage provided by IC33 and IC34.

Construction

Populating the PCB shown in Fig. 11 should not present any problems. All ICs and DIL switches may be mounted in sockets, but this is not obligatory.

The two electrolytic capacitors in the power supply are types that should be mounted upright. Each of the regulator ICs should be fitted on a heat sink.

It is convenient to provide all connexion points with a solder pin. Not, by the way, that for each control signal two solder pins may be fitted: this will facilitate the possible extension with remote control at a later date.

It is advisable to set all DIP switches to zero before the board is installed in the enclosure. The counters are then at nought at first power-up and that is a safe starting point.

The preamplifier may be installed in a 19-inch, 2-unit (88 mm) high, enclosure. The enclosure used for the prototypes – see Fig. 12 – has a double front panel. Rectangular holes are cut in the back of this panel over which the control boards are screwed. If an enclosure with a single front panel is used, the three control boards may be fitted direct to the rear of the panel with the aid of small metal brackets.

The LED located on the board with the volume and balance controls should be bent sideways by a few millimetres so that it comes directly behind the relevant opening in the front panel.

Note that self-adhesive foils for the front and rear panels of the enclosure are available through the Readers' service (see Fig. 13).

The boards for the input and system control stages dealt with in Part 1 should be fitted near the left-hand side of the rear panel.

The board for the volume and balance control stages should be fitted at the left-hand centre of the enclosure in such a way that the relays are located nearest the input boards. The mains transformer, the mains on-off switch and the mains cable entry should be fitted at the extreme right-hand rear of the enclosure, as far away as possible from the printed-circuit boards.

Note that the mains earth should be connected only to the appropriate terminal on the volume control board.

A wiring diagram for the complete preamplifier is shown in Fig. 14. For all analogue signals suitable screened cable should be used; all other connexions may be made in standard insulated circuit wire.

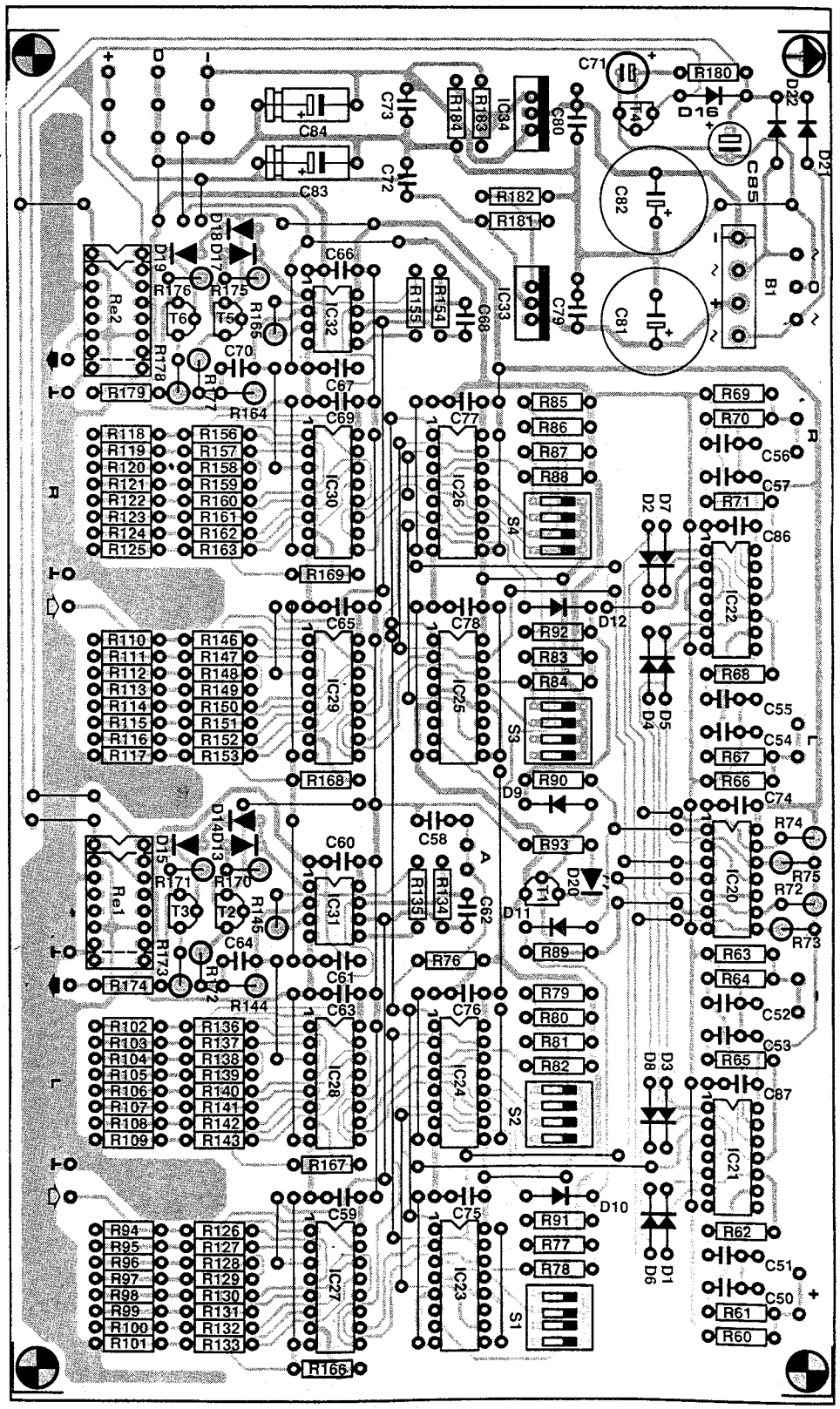

Fig. 11. Component mounting side of the printed-circuit board for the volume and balance control.

Parts list

Resistors:
R60;R63;R66;R69;R72 – R75;R91;R92 = 10k
R61;R64;R67;R70;R76 = 100k
R62;R65;R68;R71;R77 – R88;
R166 – R169 = 1M0
R89;R90 = 330k
R93 = 2k2
R94;R110 = 750Ω; 1%
R95;R111 = 787Ω; 1%
R96;R98;R112;R114 = 806Ω; 1%
R97;R113 = 825Ω; 1%
R99;R104;R115;R120 = 768Ω; 1%
R100;R116 = 715Ω; 1%
R101;R117 = 4k53; 1%
R102;R118 = 6k04; 1%
R103;R119 = 2k80; 1%
R105;R121 = 226Ω; 1%
R106;R122 = 69Ω8; 1%
R107;R123 = 21Ω5; 1%
R108;R124 = 6Ω81; 1%
R109;R125 = 3Ω16; 1%
R126 – R134;R146 – R154;
R156 – R164 = 10k; 1%
R135;R145;R155;R165 = 4k99; 1%
R170;R171;R175;R176;R180 = 47k
R172;R173;R177;R178 = 10Ω; 0.6 W
R174;R179 = 22Ω; 0.6 W
R181;R183 = 680Ω
R182;R184 = 3k3

Capacitors:
C50 – C58;C60;C61;C66;C67;C74 – C80;
C86;C87 = 100n
C59;C63;C65;C69 = 220n
C62;C64;C68;C70 = 33p
C71 = 100µ; 16 V; radial
C72;C73 = 1µ0; MKT
C81;C82 = 2200µ; 16 V; radial
C83;C84 = 47µ; 10 V
C85 = 100µ; 16 V; radial

Semiconductors:
D1 – D19 = 1N4148
D20 = LED; red; 3 mm
D21;D22 = 1N4001
B1 = B80C1500
T1 = BC516
T2;T5 = BC550C
T3;T6 = BC560C
T4 = BC517
IC20 – IC22 = 4093
IC23 – IC26 = 4029
IC27 – IC30 = 4051
IC31;IC32 = NE5532
IC33 = LM317
IC34 = LM337

Miscellaneous:
S1 – S4 = 4-way DIP switch block.
Re1;Re2 = PCB-mount 12-V relay; e.g. Siemens V23101-A0006-B101.
Qty 2: heatsink (for IC33 and IC34).
Tr1 = toroidal transformer 2×9 V @15 VA; e.g. Type 03011 (240 V mains; Jaytee Electronic Services) or Type 01011 (220 V mains).
Enclosure: 25 or 30 cm deep; e.g. ESM Type ER48/09.
Fused chassis plug for mains cord: e.g. ElectroMail stock no. 481-639.
Fuse: 100 mA slow.
PCB Type 890170-2 (see Readers Services page).
Front and rear panel foils Types 890170-F1 and -F2 (see Readers Services page).

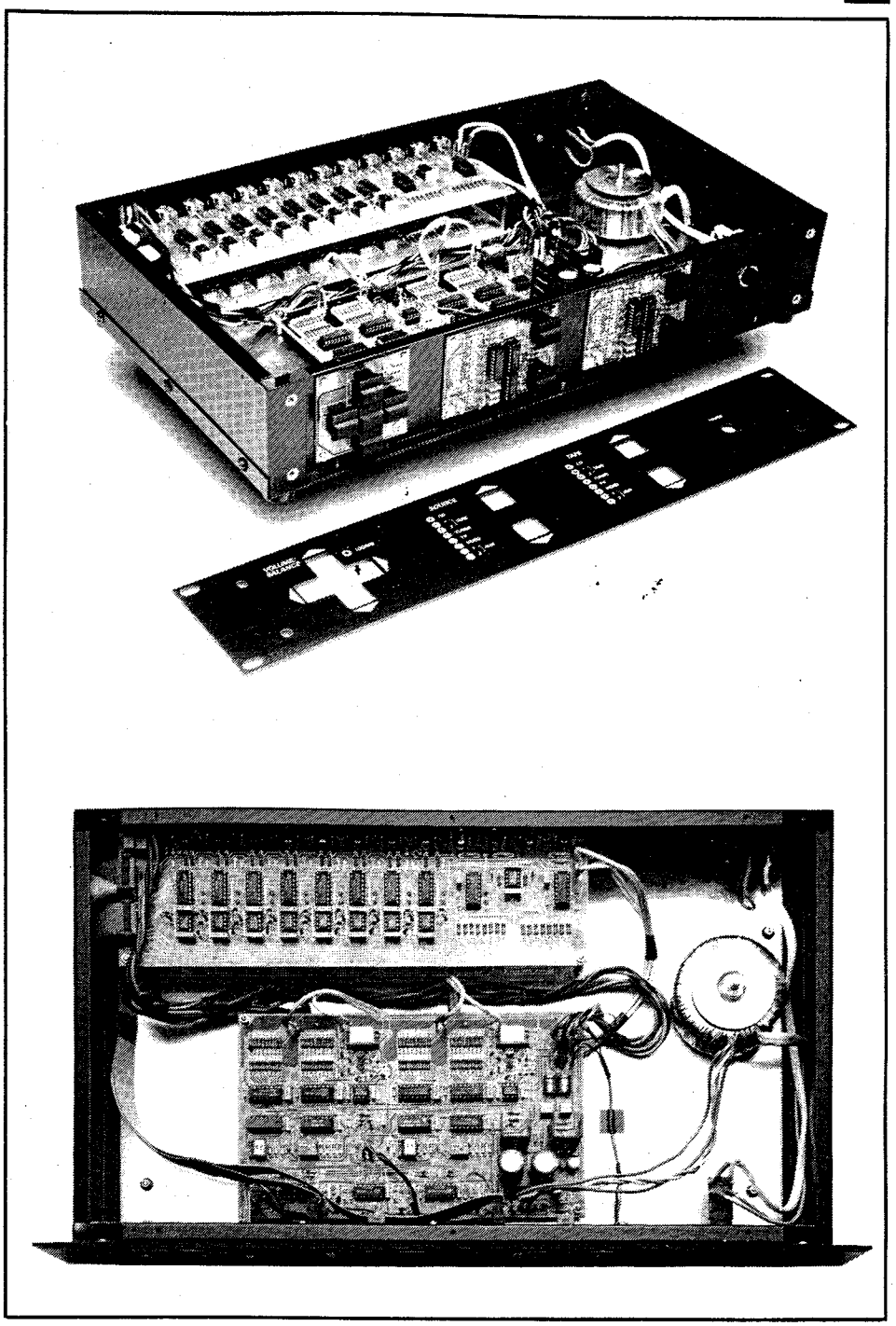

Fig. 12. General views of the prototype of the preamplifier

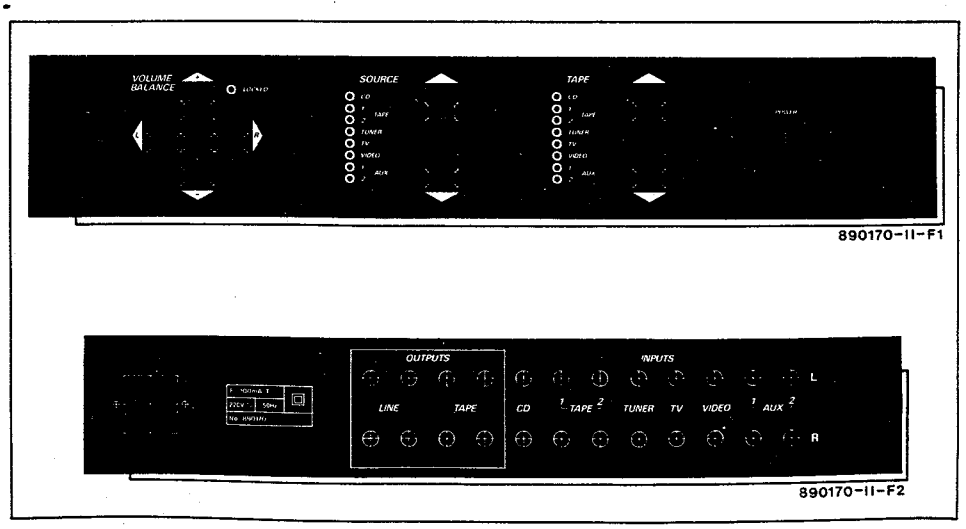

Fig. 13. Self-adhesive foils are available for the front and rear panels.

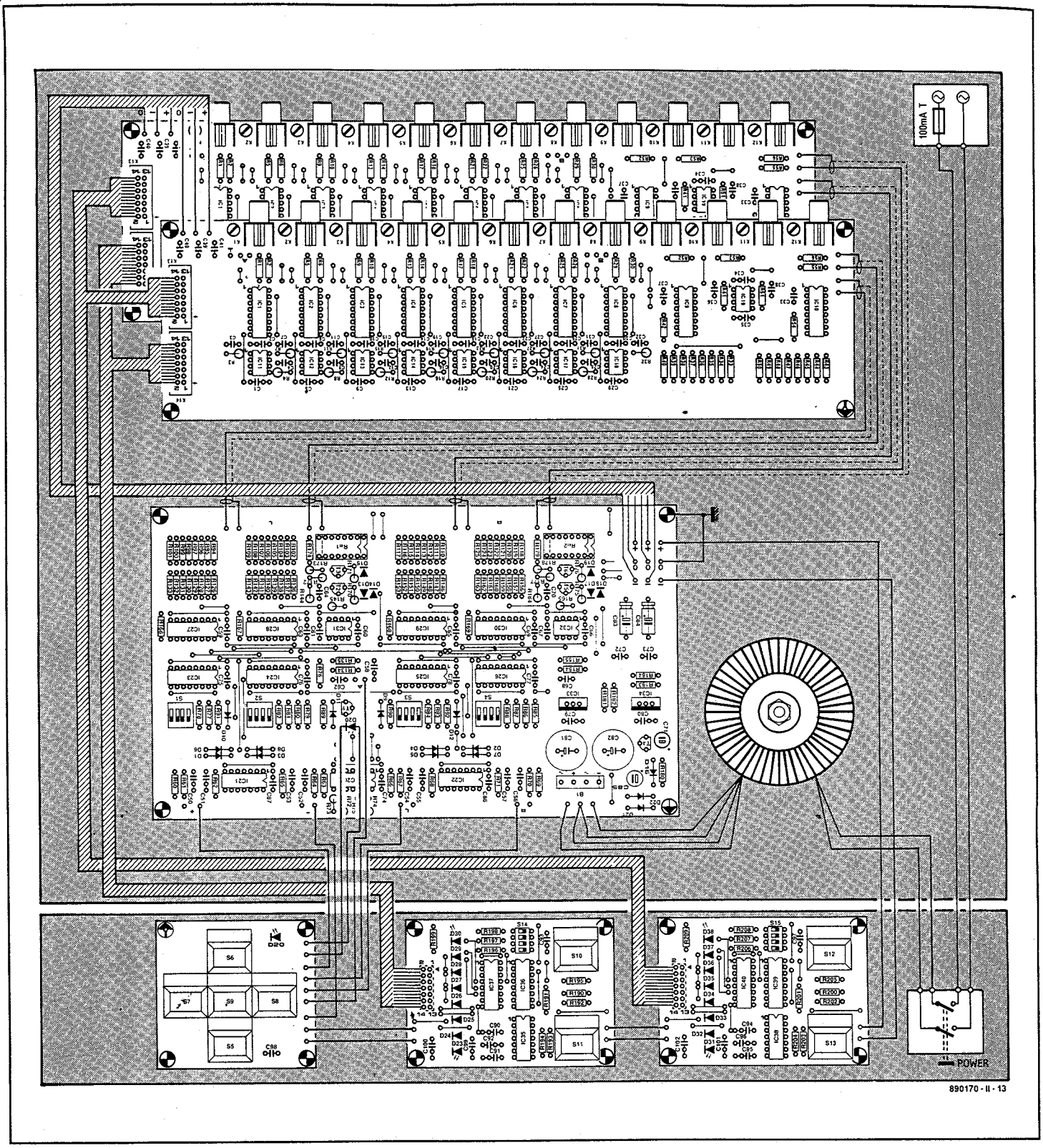

Fig. 14. Wiring diagram for the complete preamplifier.

Some ribbon cables were already described in Part 1 and these may now be shortened where necessary. If the connectors are dismantled carefully, they may be refitted to the (shortened) cable without any problems.

After all the boards are fitted and interconnected, a few simple checks can be carried out. Make sure that DIP switches S2 and S4 are OFF, otherwise there is the likelihood of a deafening sound from the loudspeakers when the preamplifier is connected into the audio system.

After the mains has been switched on, it should be possible to select all the inputs for tape-out and line-out. The volume and balance controls may also be tested: the LED should light when the minimum and maximum positions are reached. Briefly pressing the reset key should bring the volume back to the preset value.

Finally, you will have noticed that the preamplifier is DC-coupled throughout and normally this should not create any problems. However, if the input of your power amplifier has no capacitors, it may be advisable to connect a couple of good-quality capacitors (for instance, 4.7–10 µF metallized polypropylene or polystyrene types) in the line outputs.